DISNEY ULTIMATE SHOWDOWN BRACKET CHALLENGE OF DOOOOOM

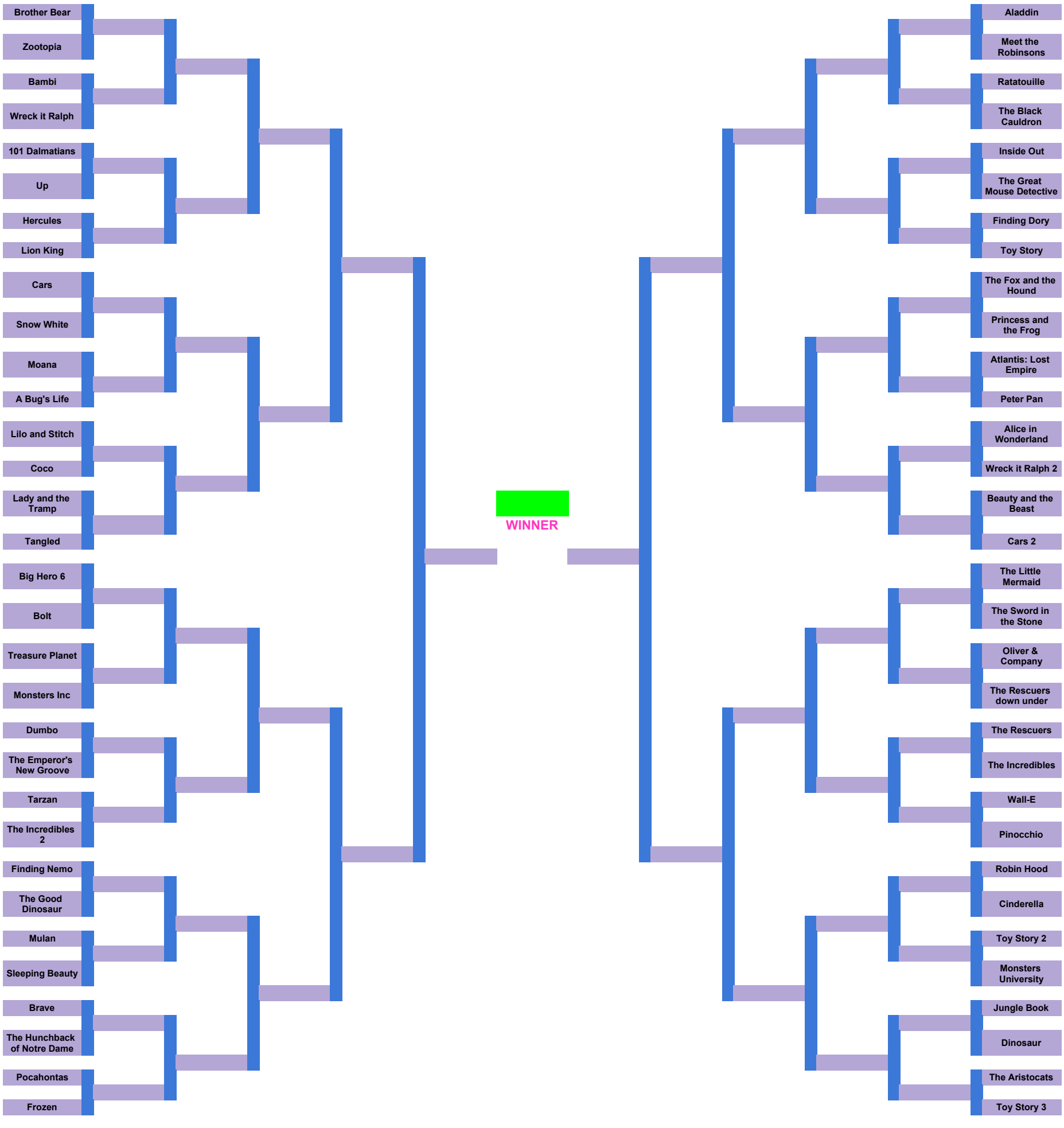

3/30/2018